NOVY Technical File

816-p2|35

Canopy
Mini Pureline 60 cm
Mineral Black



EAN 5414425259212

Energy label

▪ Energy Efficiency class (EElhood)	A
▪ Annual Energy Consumption (kWh/year) (AEChood)	34,9
▪ Fluid Dynamic Efficiency class (FDEhood)	A
▪ Lighting Efficiency class (LEhood)	A
▪ Grease Filtering Efficiency class (GFEhood)	C

Functions & features

▪ Motor	Integrated
▪ Sound absorber	Integrated
▪ Recirculation	Optional
▪ InTouch function	Standard
▪ Auto stop	▪
▪ Delayed switch off (minutes)	10
▪ Grease filter	609014
▪ Number of grease filters	1
▪ Grease filter cleaning indication	▪
▪ Recirculation filter cleaning indication	▪
▪ Control method	Push buttons + Remote control
▪ Number of speeds	3 + power
▪ Automatic Power revert (minutes)	6

Dimensions

▪ Product dimensions (WxDxH) (mm)	560 x 301 x 330
▪ Width flange (mm)	10
▪ Dimensions cut-out opening (WxD) (mm)	545 x 286
▪ Min dimensions cabinet (WxDxH) (mm)	x 600 x
▪ Advised mounting height induction hobs (Hmin-Hmax) (mm)	650 - 750
▪ Advised mounting height gas hobs (Hmin-Hmax) (mm)	650 - 750
▪ Advised mounting height ceramic hobs (Hmin-Hmax) (mm)	600 - 750
▪ Diameter outlet (mm)	150
▪ Position exhaust	Right, Top, Left, Back, Front

Lighting

▪ Functional lighting type	LED
▪ Functional light dimmable	▪
▪ Soft-ON/OFF	▪
▪ Number of functional lights	4
▪ Total energy consumption functional light (W)	8
▪ Color functional light (K)	2700/4000

Airflow and noise level

▪ Free airflow (m^3/h)	815

Airflow and noise level

- Airflow (m^3/h) measured according to EN 61591
- Sound regulation according to EN 60704-2-13
- Airflow duct out speed 1 (m^3/h) / Max pressure duct out speed 1 (Pa) 205 / 79
- Airflow duct out speed 2 (m^3/h) / Max pressure duct out speed 2 (Pa) 333 / 219
- Airflow duct out speed 3 (m^3/h) / Max pressure duct out speed 3 (Pa) 399 / 322
- Airflow duct out max powerspeed (m^3/h) (Qboost) / Max pressure duct out max powerspeed (Pa) 534 / 370
- Sound pressure duct out speed 1 (dB(A)) / Sound power duct out speed 1 (dB(A)) 25 / 37
- Sound pressure duct out speed 2 (dB(A)) / Sound power duct out speed 2 (dB(A)) 37 / 49
- Sound pressure duct out speed 3 (dB(A)) / Sound power duct out speed 3 (dB(A)) 42 / 54
- Sound pressure duct out at max powerspeed (dB(A)) / Sound power duct out at max powerspeed (dB(A)) (LWAboost) 49 / 61

Technical specifications

- Maximum power (W) 118
- Voltage appliance (V) 220-240
- Frequency (Hz) 50-60
- Power consumption in stand-by-mode (Ps) (W) 0.25
- Net weight (kg) 9,8
- Length power supply cable (m) 1,3

Technical drawing

1

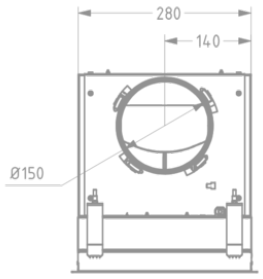

2

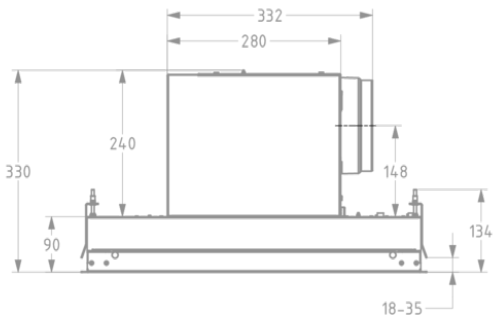

3

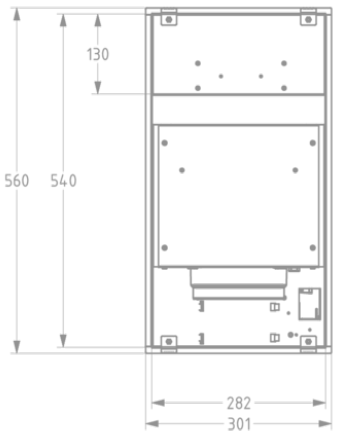

4

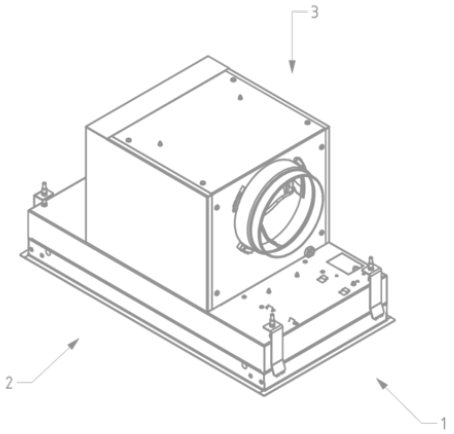

Accessories

Recirculation kit

	811400	Recirculation set Novy Mini Pureline 810, 811, 816

Recirculation box

	841400	Exhaust box with monoblock filter
	842400	Exhaust box with monoblock filter
	843400	Exhaust box with monoblock filter
	7931400	Exhaust box with monoblock filter
	7932400	Exhaust box with monoblock filter
	7933400	Recirculation box with monoblock filter

Efficiency Curve

